WIRING DIAGRAM

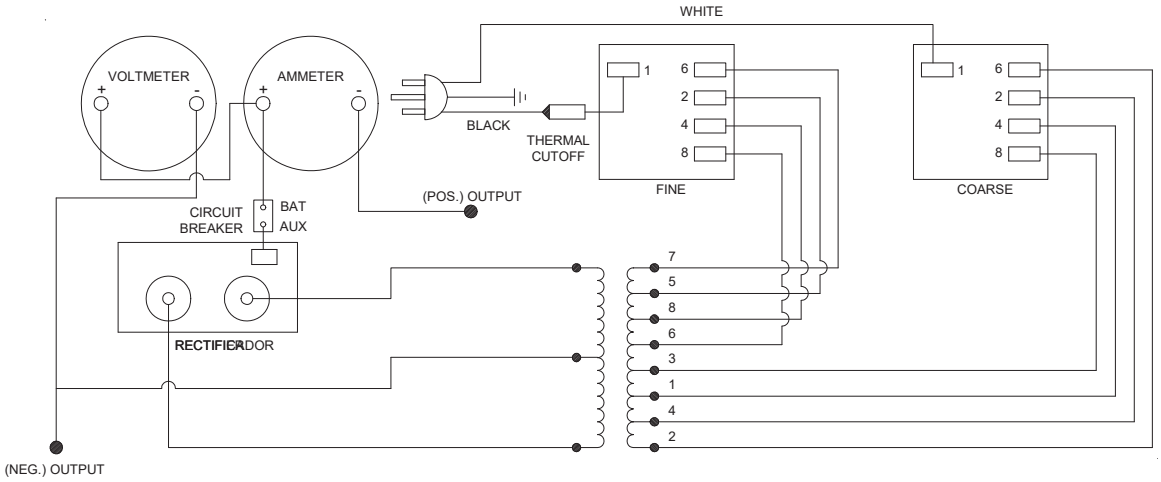

MODEL 6065 PART LIST

Switch w/knob	611187
Ammeter	605632
Voltmeter	610058
AC Cord	611297
DC Cable Set	605628
Rectifier Assembly	610100
Circuit Breaker	610069
Handle (optional accessory)	610057
Transformer	610097